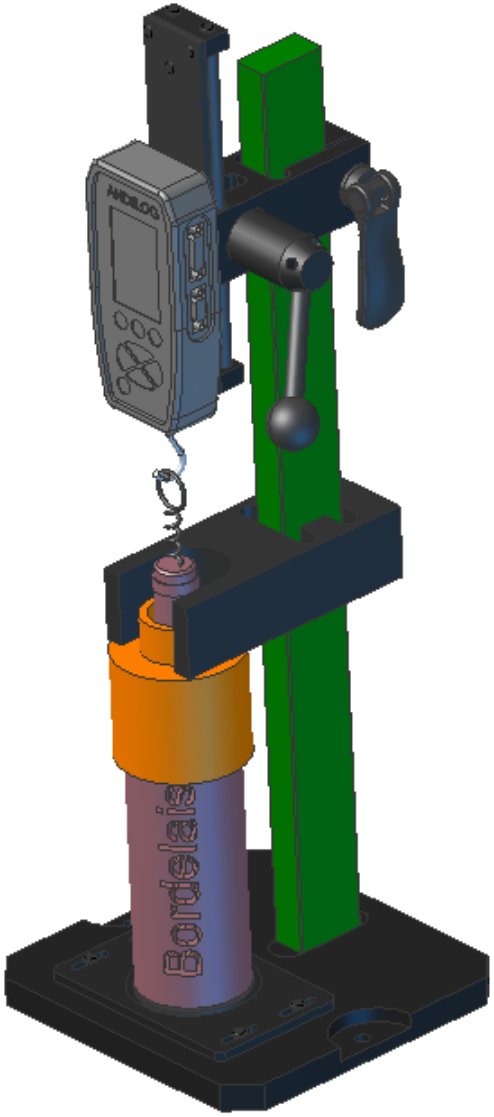
ANDILOG
Bordelais